ASSEMBLY INSTRUCTIONS

Utility Carts

MW103-MW106
MW108

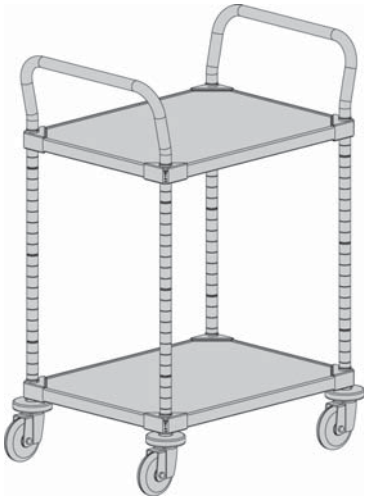

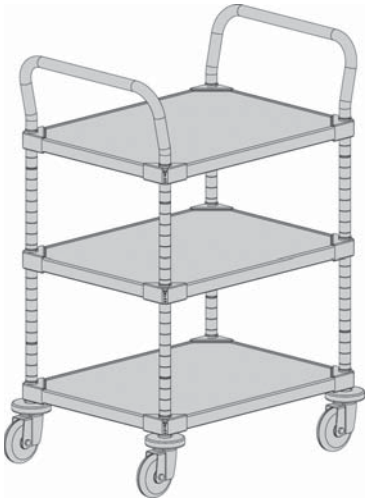

MW203-MW206
MW208

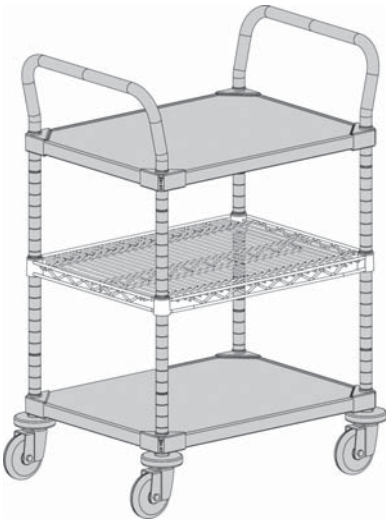

MW301-MW304, MW306

MW401-MW404, MW406

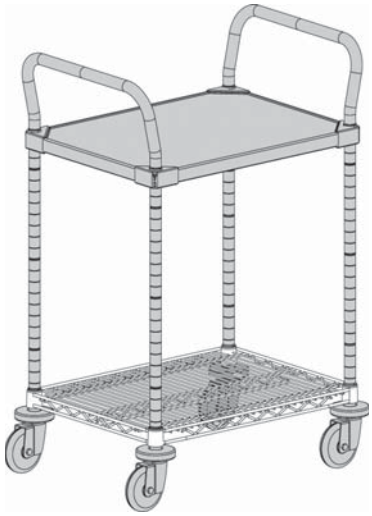

MW501-MW504, MW506

MW601-MW608
MW611, MW612

MW701-MW708
MW711-MW712

InterMetro Industries Corporation
North Washington Street, Wilkes-Barre, PA USA 18705
For Product Information Call: 1-800-992-1776
Visit Our Web Site: www.metro.com

ASSEMBLY INSTRUCTIONS
For Utility Carts

ASSEMBLY INSTRUCTIONS FOR MW203-MW206, MW208

Two People Required to Assemble Unit.

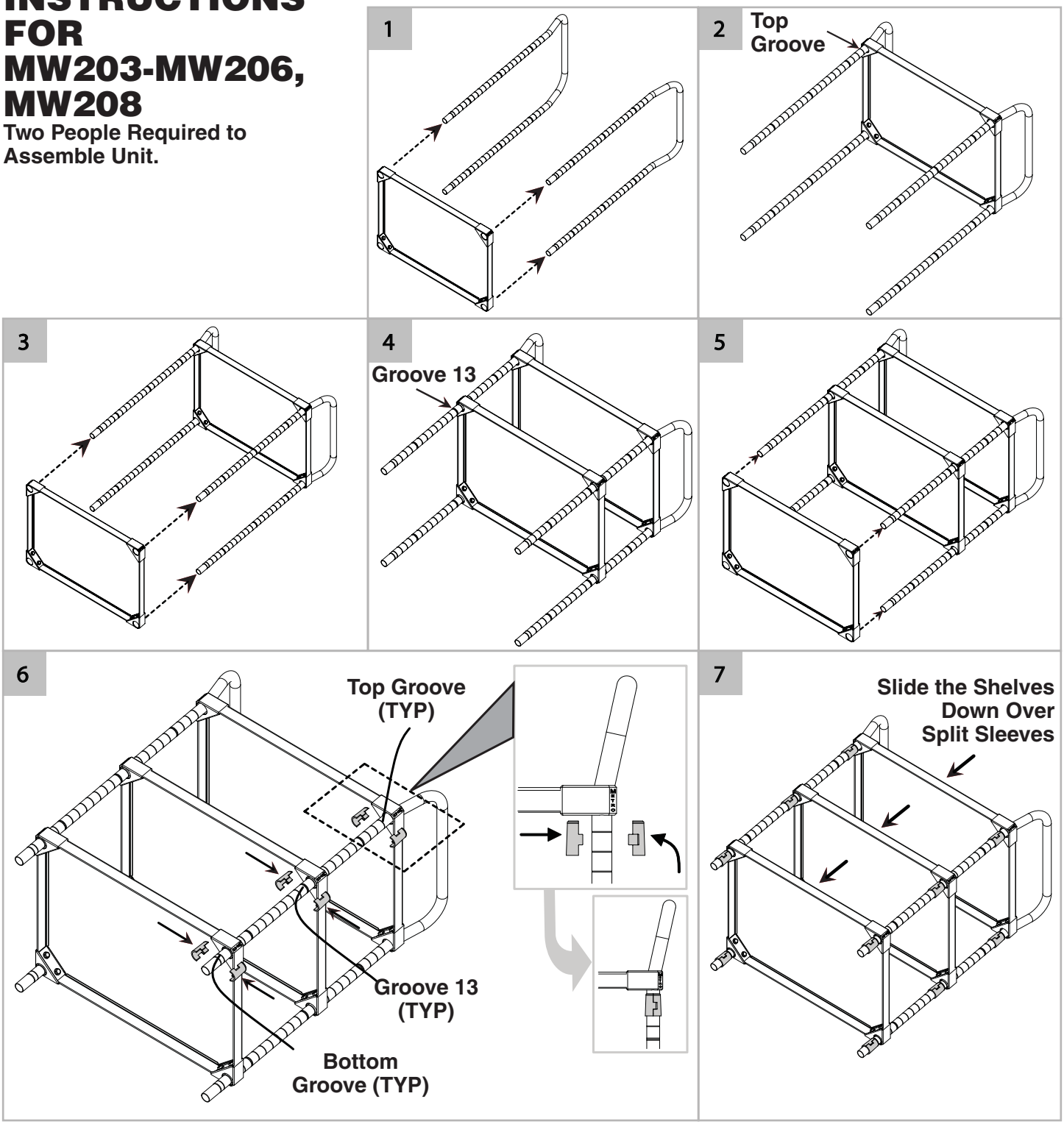

8

Stand the Unit Upright

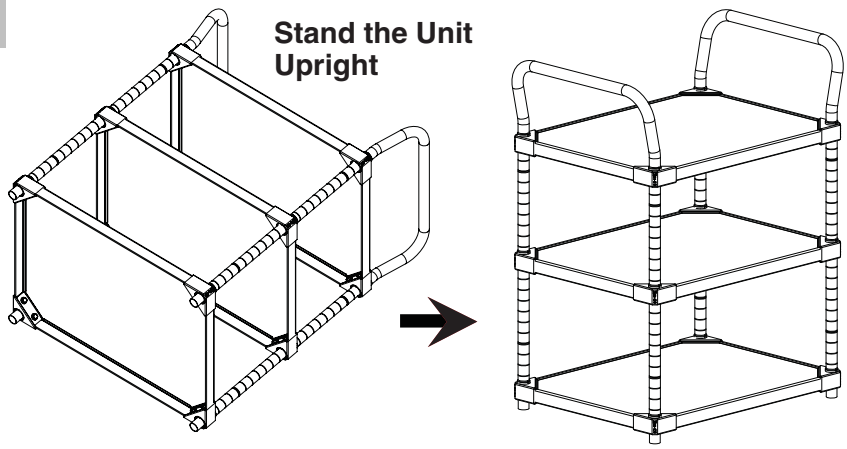

9

All Corners

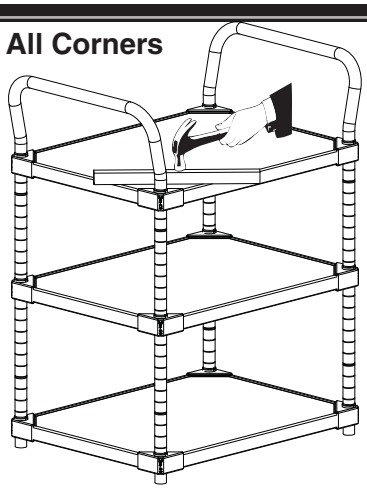

10

Lay the Unit on its Side

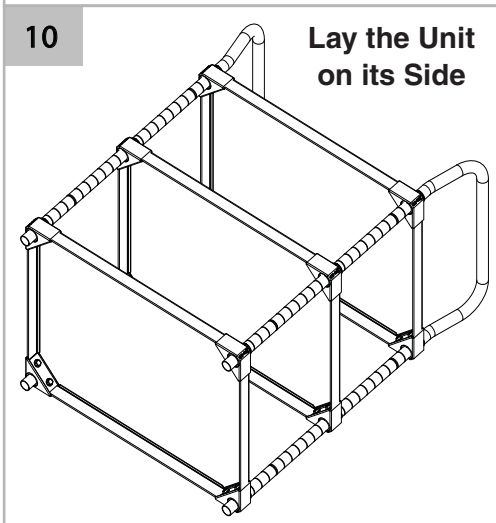

11

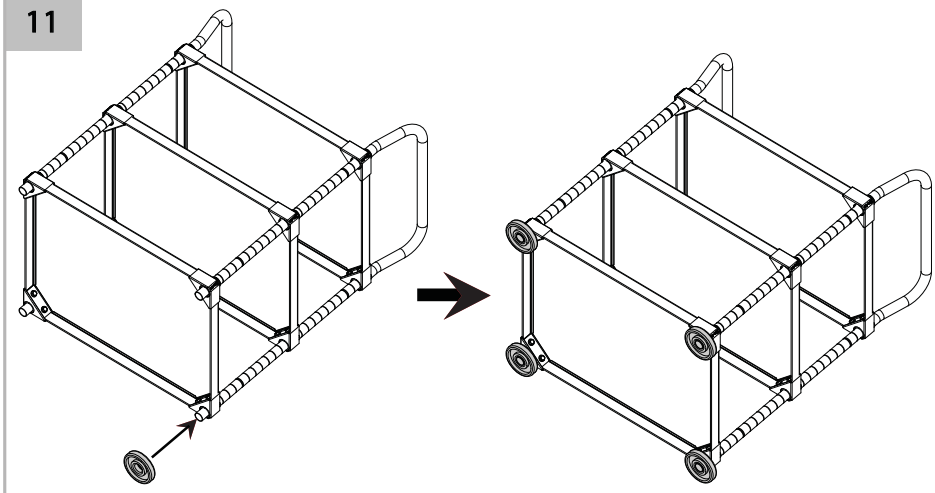

12

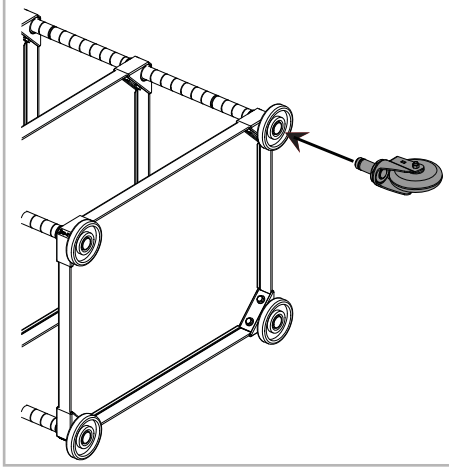

13

All Corners

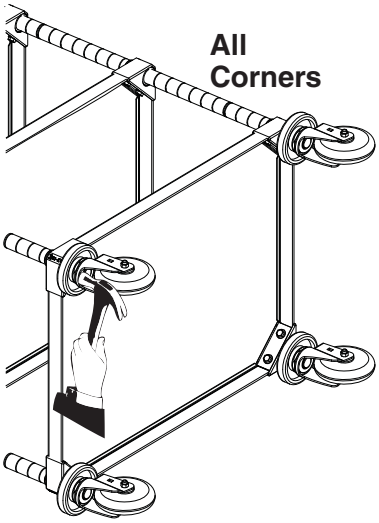

14

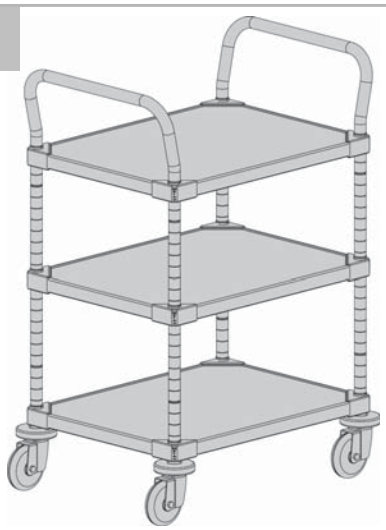

THIS COMPLETES THE ASSEMBLY OF MW200 SERIES UTILITY CARTS

Utility Carts

ASSEMBLY INSTRUCTIONS FOR MW401-MW404, MW406

Two People Required to Assemble Unit.

Follow Steps 1-2 of MW203-MW206, MW208

3

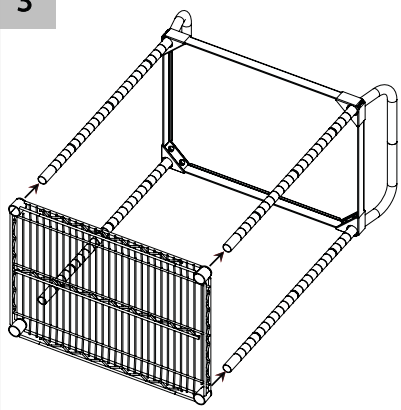

4

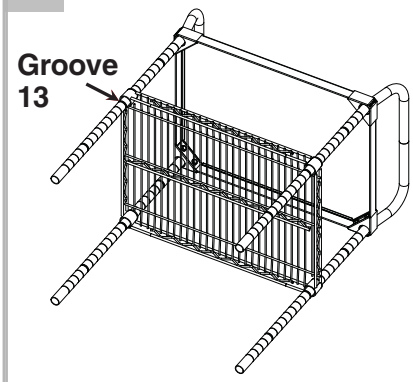

5

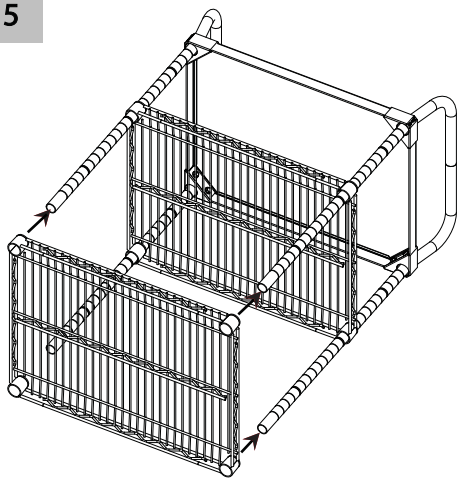

6

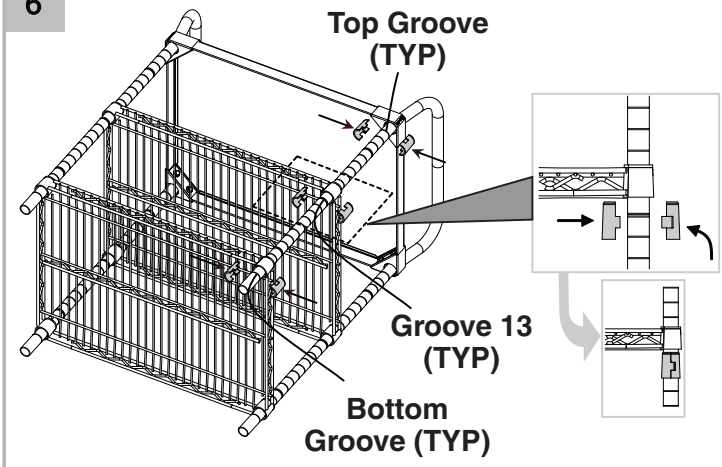

7

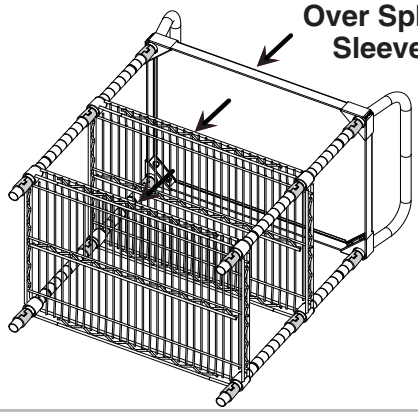

8

Follow Steps 8-13 of MW203-MW206, MW208

9

THIS COMPLETES THE ASSEMBLY OF MW400 SERIES UTILITY CARTS

InterMetro Industries Corporation
North Washington Street, Wilkes-Barre, PA USA 18705
For Product Information Call: 1-800-992-1776
Visit Our Web Site: www.metro.com

L01-078
Rev. A
11/10

Information and specifications are subject to change without notice. Please confirm at time of order.